TOWER®

User & Installation Instructions

Wi-Fi Radio Frequency Programmable Thermostat

PWFSTAT+

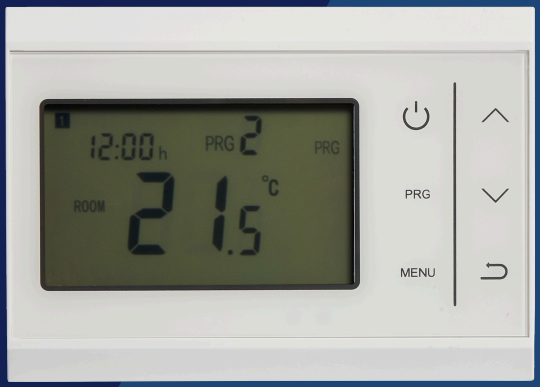



What's in the Box



1 x Thermostat Transmitter



2 x AAA Batteries



1 x Thermostat Receiver



4 x Screws



1 x Thermostat Stand



2 x Wall plugs

Please keep these instructions for future reference

Tools Required (not supplied)



Voltage tester / Multimeter



Insulated screwdrivers (Philips and Flat)



Wire strippers / Cutters



Spirit level



Pencil

Specification

- Power supply: 230V AC, 50Hz (receiver) 2 x AAA batteries (transmitter)
- Switch rating: 7A (Resistive), 3A (Inductive)
- Contact type: Volt-free (SPDT Changeover)
- Temperature setting range: 5°C to 30°C
- Switching differential: ±0.5°C (or TPI controlled)
- IP rating: IP20 (indoor use only)
- RF frequency: 868Mhz
- WiFi: ISM 2.4GHz - WLAN 802.11 b/g/n
- Temperature regulation: Selectable: On/Off, Optimising, T.P.I
- Programme capacity: 4 user adjustable temperature periods
- Day groups: 5 + 1 + 1 (weekday / weekend)
- Class IV control: 2% system efficiency contribution
- Mounting: Wall or stand mounted

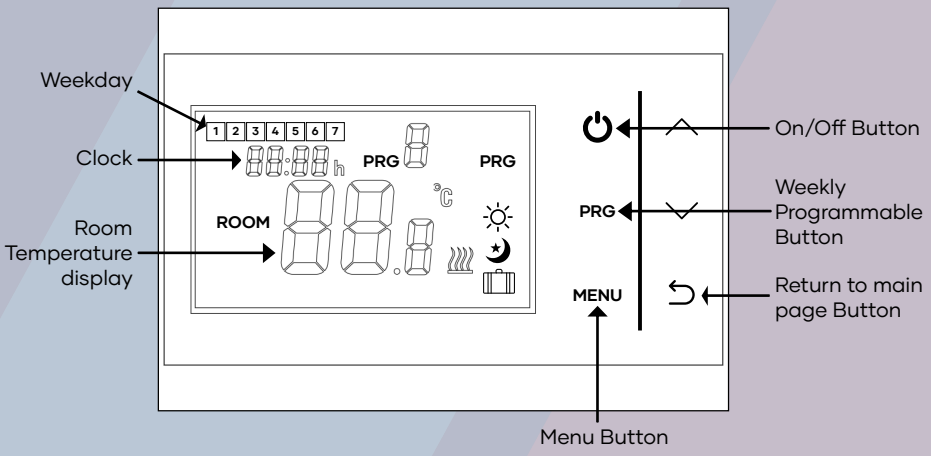

Specification

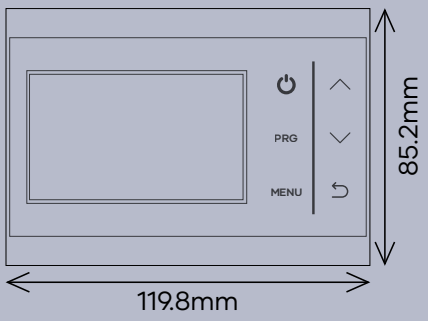

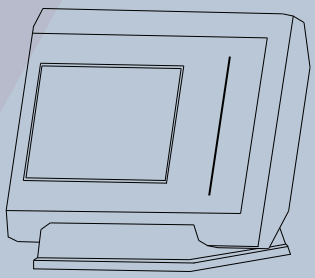



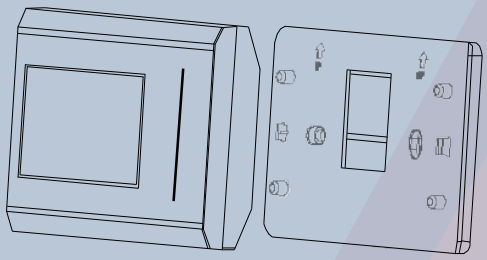

What is it?

A programmable thermostat with TPI (Time Proportional and Integral) regulation is a smart energy-saving device used to control your heating system.
Unlike older thermostats that just turn the heating fully on or fully off based on a simple temperature limit, a TPI thermostat uses a clever mathematical algorithm to predict heat loss and keep your room at a steady temperature.

Standard thermostats suffer from "overshooting" or "undershooting". If you set your heating to 20°C, a standard thermostat waits until the room hits 20°C to turn off. However, the radiators are still piping hot, so the room keeps warming up to 21°C or 22°C (overshooting). Then, it waits until the room drops below 20°C to turn back on, making you feel a sudden chill (undershooting).
TPI fixes this by switching from continous heating to short, calculated bursts.

The "Time Proportional" part: As the room temperature gets close to your target, the thermostat calculates how much heat is actually needed. Instead of leaving the boiler on, it fires the boiler up for a few minutes out of every hour.

The "Integral" part: The thermostat learns from past performance. It looks at how fast your room heats up and cools down, adjusting its firing time to compensate for the specific insulation of your home and the weather outside.

With Wi-Fi connectivity you can control your homes heating from anywhere in the world.

How it works?

Temperature regulation techniques

The default temperature regulation technique is TPI mode; TPI mode switches the heat source on and off at varying intervals, thereby reducing the average temperature of the water returning to the boiler. By operating in this way the thermostat will regulate the temperature more accurately, without the swings above and below the set temperature of an On/Off regulation device. TPI mode provides greater comfort, and can save between 6 to 10%* on energy costs, compared to a simple On/Off device. TPI mode is recognised within the BEIS 'smart control' criteria, being a class IV regulation technique, contributing 2% to system energy efficiency.
*source: BRE Report September 2017 "Compensation and TPI Heating Controls"

The user can select NOR mode which regulates as an On/Off thermostat. The heating will operate until the set temperature has been achieved, it will then turn off until the room temperature falls back below the set temperature, and this cycle will repeat until the next programmed temperature change. The temperature differential is +/- 0.5°C. Selecting this mode means the control operates just like a traditional dial-type thermostat. On/Off temperature control is a Class I regulation technique, contributing 1% to system energy efficiency.

The user can select Optimisation mode: the control set operates to achieve the target temperature by the start of the next programmed temperature period. The time interval is set according to the speed of reaction of the heating system, at 10, 15, or 20 minutes, which is the time allowed for the heating to increase the temperature by 10°C. As the nights become colder in the autumn, the controller will bring the heating on a little earlier. As the nights become less cold in the springtime, the controller will bring the heating on a little later. These adjustments are made to achieve the desired temperature at the programmed time. If there is a sudden change in average overnight temperature, the controller may take a day or two to adjust. Optimisation is recognised within the UK Government BEIS (Department for Business, Energy and Industrial Strategy) 'smart control' criteria.

T.P.I. temperature regulation example

If T.P.I. regulation has been selected, the heating will be switched On and Off according to an algorithm, which works out the best way to regulate the temperature as closely as possible to the set point. You must set Options 10 (heating cycles per hour) and 11 (proportional bandwidth) in the configuration menu to match the heating system response time and achieve the best control.
When a building is heated, the temperature starts to increase. If the heating is switched off, the temperature will continue to increase for a short time, due to the remnant heat in the system, which has to pass from the radiators into the rooms. T.P.I. (Time proportional / Integral) temperature regulation technique is designed to work with this characteristic, to avoid over– and undershooting the set temperature.
In practise, this means that the thermostat will switch the heating On, and monitor the rate of rise of temperature, until the temperature starts to approach the set point. Before the temperature reaches the set point, the thermostat will switch the heating Off, thus allowing the remnant heat to make-up the difference. The thermostat will continue to switch the heating On and Off in an anticipatory fashion, in order to keep the actual temperature as close as possible to the set point. The result is that the actual temperature will avoid the over/under-shooting which results from the ON/OFF regulation technique. The benefit to the occupants is that energy is not wasted, and the temperature is more comfortable. According to the Building Research Establishment*, energy cost savings can be between 6 and 10% compared to a thermostat using a simple ON/OFF temperature.

How it works?

On/Off temperature regulation example

In the ON/OFF regulation setting (NOr in the configuration screen), the heating will be controlled by switching On and Off around the set point, just like a traditional dial-type mechanical thermostat. The temperature will rise above, and fall below the set point, as the heating is alternately switched on and off.

If the thermostat is left in the default ON/OFF temperature regulation configuration, if the first program is 18°C at 06:00, the thermostat will switch the heating on at 06:00. If the ambient temperature in the property had fallen to 12°C, the temperature achieved by the heating will be governed by the rate of rise of temperature, which is the result of the heat output of the heating system, and the heat loss characteristic of the property. In this example, assuming that the temperature in the property increases by 10°C every 10 minutes, the temperature would only reach 18°C after one hour - i.e. at 07:00. The thermostat will switch the heating off 0.5°C above the set temperature, and switch back on again once the temperature has fallen 0.5°C below the set temperature, according to the differential or hysteresis set in the configuration menu (default hysteresis 0.5°C)

Optimising temperature regulation example

If Optimisation regulation has been selected (OPs in the configuration screen), the heating will be switched on early to achieve best results. This is not a fault, it's the way the device has been configured.

If optimising temperature regulation is selected in the configuration menu, this makes the thermostat 'optimise' the heating start-up times in order to achieve the set temperature at the set time. This means that the thermostat will monitor the actual temperature, and switch on early, in order to raise the temperature to the required level. For best results, the Time Interval (option 9 in the configuration screen) should be set to match the speed of response of the heating system. The actual temperature in-between heating periods is governed by the heat loss characteristic of the property, and the outdoor temperature: when it's colder outside the property loses more heat. The thermostat learns or remembers the time taken to increase the temperature of the property, and adapts the optimisation period using multiples of the set Time interval to get the best result. If the outdoor temperature changes significantly, the thermostat must relearn the rate of rise of temperature in the property, and adapt to a new start-up time.

Health & Safety and Warnings

General Safety

- This product must be installed by a competent person
- Disconnect the mains power supply before installation, maintenance or cleaning
- Do not expose the unit to water or excessive moisture
- Do not use the product if damaged
- Keep the product away from children
- Do not modify or disassemble the product
- Ensure all electrical connections comply with local wiring regulations

Electrical Safety

- Verify the power supply matches the product rating
- Ensure power is isolated before removing the cover
- Never touch exposed wiring while power is connected
- Use only suitable tools and insulated equipment

Environmental Safety

- Install indoors only
- Avoid installation near direct heat sources or strong electromagnetic interferance
- Dispose of packaging responsibly

Assembly and Use

Before installation:

- Read all instructions fully
- Isolate the mains power supply
- Confirm the installation location is suitable for both the transmitter and receiver
- Check all parts are present

Installation - Positioning

The receiver should be located close to the heat source, and should derive it's mains supply from the same circuit that powers the heater/boiler. However, avoid locating it directly next to the boiler's casing (the RF signal range is 20 to 30 metres in conventional brick/timber/tile structures. Metallic materials such as reinforced concrete and foil-backed plasterboard will reduce or in some cases block the radio frequency signals).

The transmitter should be located in a main living area, where it is visible, has a free air-flow and is not unduly influenced by draughts or extraneous heat sources: radiator / direct sunlight / lamp— please refer to the diagrams below:

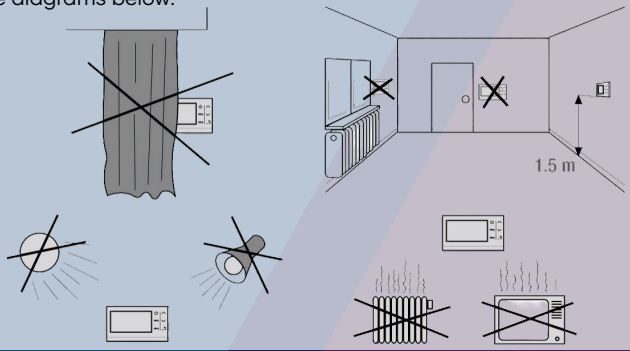

Assembly and Use (continued)

Installation - Receiver

It is intended for wall-mounting in a clean, dry environment. The receiver has 60mm wall-fixing centres which are compatible with standard pattress boxes. A back-plate channel is provided if wiring has to be surface-run.

- Separate the receiver cover from the base by gently levering the cover upwards with a flat-bladed screwdriver placed into the two slots on the underside.
- Position the backplate against the wall and mark fixing hole positions
- Drill holes and insert wall plugs, if required
- Secure the receiver to the wall using the supplied screws
- Wire receiver as per the below diagrams:

Before connecting the receiver to the boiler, make sure that you have followed the boiler external thermostat connection instructions. A mains connection to a volt-free terminal could damage the boiler circuitry.

The receiver is a double-insulated Class II control, therefore no earth connection is needed. Use a separate single screw terminal block to provide earth continuity if required.

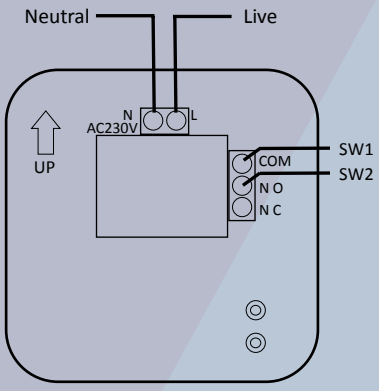

Wiring for volt-free switching:

Connect 230V AC Live and Neutral to L & N
Connect the volt-free boiler connections (SW1/SW2) to COM & NO (common and normally open)
Do not connect anything to terminal NC

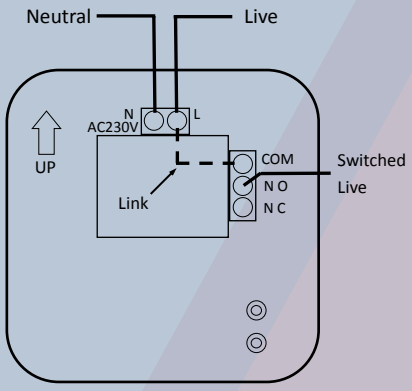

Wiring for mains switching:

Connect 230V AC Live and Neutral to L & N
Fit a short link wire between L & COM
Connect the 230V mains switched Live to NO
Do not connect anything to terminal NC

- Once the wiring is complete you can clip the cover back onto the backplate.
- Align the two lugs on the upper edge of the cover with the tabs on the base and pivot downwards, applying light pressure until the housing clicks into place.

Assembly and Use (continued)

Installation - Transmitter

The transmitter can be wall-mounted or placed on a table-top or counter, using the back-plate or the stand included in the box.

If wall mounting;

- Remove the transmitter from the back-plate by rotating the transmitter upwards from the bottom.
- Position the backplate against the wall, observing the UP ↑↑ marks
- Mark fixing hole positions and drill holes
- Insert wall plugs, if required and secure the back-plate to the wall using the supplied screws.
- Re-fit the transmitter to the back-plate by aligning the top two recesses on the back of the transmitter to the top two lugs on the back-plate. Rotate downwards to "click" the other two lugs in place.

Note: if you hold the transmitter for longer than a few seconds, it will start to detect your body temperature, rather than the ambient room temperature, and this will affect the calculation of demand/no demand for heat. Replace the transmitter onto the back-plate or stand so that it will again start to detect the ambient room temperature.

If table-top mounting;

- Choose a suitable location for the transmitter to sit and place it into the stand

Preparing the transmitter;

- Open the battery compartment on the back of the transmitter and insert 2 x AAA alkaline batteries, matching the polarities correctly.
- After inserting batteries the **Time and Date** need to be set. Press and hold the **MENU** button for ~3 seconds under power on mode. This will cause the **minute** display to flash - change the values using the up and down buttons (each press is one minute).
- Touch **MENU** again, the **hour** display will flash - change values using the up and down buttons (each press is one hour)
- Touch **MENU** again, the **day** display will flash as a number - change this value using the up and down buttons. Use 1 for Monday; 2 for Tuesday; 3 for Wednesday; 4 for Thursday; 5 for Friday; 6 for Saturday; 7 for Sunday

After the time and day are set, you can continue with the following steps to set the temperature modes

- Touch **MENU** again, the **SUN** icon will be displayed - change the values by using the up and down buttons. The **SUN** option is manual mode.
- Touch **MENU** again, the **MOON** icon will be displayed - change the values by using the up and down buttons. The **MOON** option is energy-saving mode.
- Touch **MENU** again, the **SUITCASE** icon will be displayed - change the values by using the up and down buttons. The **SUITCASE** option is holiday mode.
- Press the **On/Off** button to enter regular mode once everything is set.

Assembly and Use (continued)

Installation - How to use & Programming

Temporary override using the UP and DOWN arrow buttons

Whilst in program mode (display shows **PRG**) , you can adjust the set temperature by touching the **UP** or **DOWN** arrows. The display will change from showing '**ROOM**' and the current measured temperature, to showing '**SET**' and the temperature that you are now setting. Five seconds after you have changed the temperature to the value you want for the time-being, the thermostat will 'time-out' and once again show '**ROOM**' and the measured temperature. The heating will be switched ON or OFF according to the adjustment you have made. The programmed time / temperature setting will be restored with the next program entry in the memory.

Permanent override — manual mode using the MENU button

In the program run mode, touch the **MENU** button briefly to switch between Program mode (**PRG**) or manual mode (sun icon ☼). In manual mode you can set a different temperature from the programme. Manual mode is a permanent selection which will only change if you touch the **MENU** button again.

Energy-saving mode — manual mode using the MENU button

In the manual run mode, touch the **MENU** button briefly to choose between manual mode (sun symbol ☼) or energy-saving mode (moon icon ☾). In energy-saving mode you can set a different temperature from the programme. Energy-saving mode is a permanent selection which will only change if you touch the **MENU** button again.

Holiday mode — manual mode using the MENU button

In the manual run mode, touch the **MENU** button briefly to choose between energy-saving mode (moon icon ☾) or holiday mode (suitcase icon 🧳). In holiday mode you can set a different temperature from the programme. Holiday mode is a permanent selection which will only change if you touch the **MENU** button again.

Programme mode

Ensure the device is in **PRG** mode (display should show **PRG** in the top-right). If it isn't then press **MENU** until **PRG** mode is selected. The PSTAT+ has a factory pre-set time and temperature sequence as shown in the table below:

	Monday to Friday				Saturday				Sunday			
Period	1	2	3	4	1	2	3	4	1	2	3	4
Time	07:00	08:00	18:00	22:30	08:00	10:00	18:00	23:00	09:00	12:00	19:00	23:45
Temp.	21°C	18°C	21°C	16°C	21°C	21°C	21°C	16°C	23°C	21°C	16°C	21°C

Press and hold the **PRG** button for ~5 seconds - the display will show the first set program. You can confirm the time by touching the **PRG** button again, or change it in 15 minute increments by touching the **UP** or **DOWN** buttons. Press the **PRG** icon to confirm, then you will be viewing the temperature. Confirm by pressing the **PRG** icon, or change the value in 0.5°C steps to the new required temperature by touching the **UP** or **DOWN** arrows. Touch **PRG** to confirm. You will then be viewing the second time / temperature program. Touch **PRG** to confirm, or change with the **UP** / **DOWN** arrow, and confirm with the **PRG** icon. If you want to create your own program, you must over-write the pre-set sequence. It helps to write down what you require first. After programming you can touch the **On/Off** button to save and quit, or 10 seconds afte the last button touch the PSTAT+ will time out to program mode.

Assembly and Use (continued)

Installation - WiFi Guide

The control set uses the license - free 868MHz radio band to communicate between transmitter and receiver. The receiver incorporates both 868MHz and 2.4GHz Wi-Fi communications. The Smart Life App (or the Tuya Smart App) will allow control of the thermostat and receiver wherever you are, from your smart phone via your Wi-Fi router.

Install the Smart Life App on your iOS or Android mobile phone - scan the QR code below or search Smart Life on the iOS Appstore or Google Playstore. The Tuya Smart App can also be used to control your device.

Smart Life **Tuya Smart**

Load the app once it has been installed on your smart phone and follow the on screen instructions to create your user account.

Before adding the thermostat in the App, make sure that you have followed the installation instructions for the receiver and transmitter and enusre both are powered up. Then add the device as noted below;

If you have a dual-band WiFi router, make sure that your phone is connected to the 2.4GHz network. You may have to separate the 2.4GHz and 5GHz networks in the home page of your router to do so.

1. In the App home screen touch the "+" icon (top RH corner) then "Add device".
2. Select "Small Home Appliances" in the left hand column and then "Thermostat" from the list of devices; you will have to scroll down to find the Thermostat icon
3. Press both buttons on the receiver until the green LED is flickering. Confirm this step on the App
4. The App will now load the device and the LED will stop flashing.
5. Device "WiFi Thermostat" will be found and added successfully. You will now be able to see the device on the app home screen.
6. Click on the device for more options and to set your weekly program.
7. Click "Setting" to enter parameter settings
8. Click the pen icon (top RH corner) to edit device information

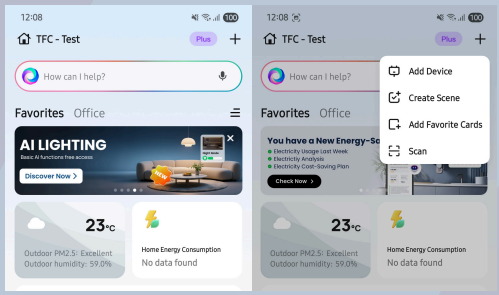

1. Touch the "+" icon and then "Add Device"

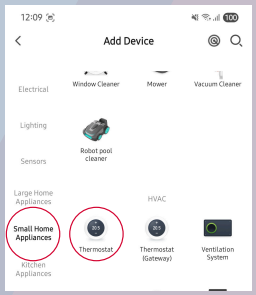

2. Select "Small Home Appliances" and then "Thermostat"

Assembly and Use (continued)

Follow the instructions below to control your PWFSTAT+ with your smart phone. The home screen gives access to other functions:

Switch - switch the thermostat ON or OFF. Note that if you turn the thermostat OFF, whilst this will save battery power, the thermostat will no longer control the heating, which will also remain OFF.

Setpoint - move the slider round to the desired temperature or touch ∧/∨ to change the current temperature set-point

Mode - Allows you to quickly change from Program, Comfortable, ECO and Holiday modes.

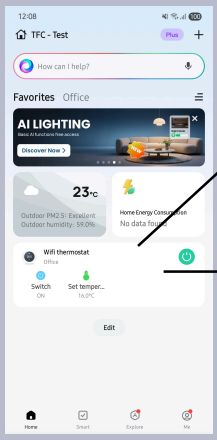

Touch the WiFi thermostat panel icon to open access to additional functions

Touch the pen icon to re-name the device and view/amend basic parameters about the device settings/functions, including device sharing, remote operation (Amazon Alexa). From here you can also remove the device from the App

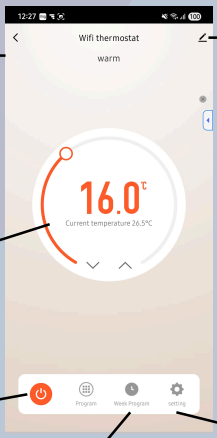

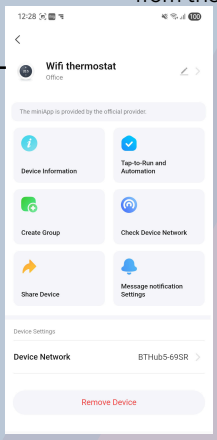

To set the Central Heating target temperature (use the slider or the Up/ Down arrows)

Switch the thermostat ON or OFF (see above)

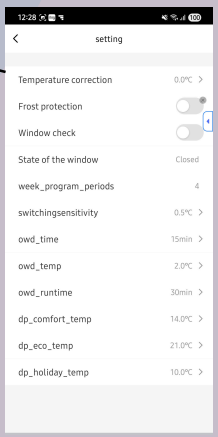

Touch the settings icon to view/amend device settings (see next page) for details

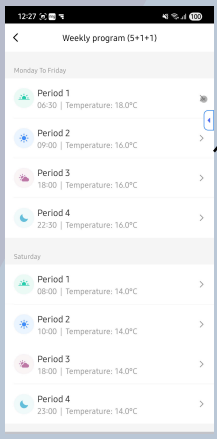

Touch the clock icon to enter a timed schedule if required. The schedule will switch the transmitter ON and OFF (and thereby enable or disable the weekly program) according to your requirements.

Assembly and Use (continued)

Installation - Advanced Settings

To access the advanced settings menu; first turn the transmitter off by touching the **On/Off** button. Then long press the **MENU** button until the display illuminates. You can cycle through the options by touching **MENU** and alter the values by using the **UP** or **DOWN** buttons.

If no button is pressed for ~10 seconds the display will time-out, any changes will be saved.

Option	Description	Range	Default Value
01	Temperature calibration	-8°C to +8°C	0°C
02	Hysteresis (differential)	0.5°C to 5°C	0.5°C
03	Frost protection temperature	5 to 15°C / -- (Function off)	--
04	Open window default function (OWD)	0 (Function off) / 1 (Function on)	0
05	OWD detect time	2 to 30 minutes	15 min
06	OWD drop temperature (within detection time)	2°C to 4°C	2°C
07	OWD delay time select (return to previous working status)	10 to 60 minutes	30 min
08	Temperature regulation mode	NOr: Normal (On/Off) OPs: Optimum start tPi: Time proportional / integral	tPi
09	Time interval for OPs	10, 15, 20 minutes	10
10	Number of heating cycles/hour (for tPi)	2, 3, 6 or 12	06
11	Proportional bandwith (for tPi)	1.5°C to 3°C	2.5°C
12	Pairing code	--	4 digits

Advanced settings - additional notes:

Option	Description
03	If you set a frost-protection temperature, the heating will be switched on when the measured temperature falls below this level, even if the transmitter has been turned off
08	Please read "How it works" for a full explanation of temperature regulation modes
09	Set if you chose OPs (Optimum start) regulation. For the best results, the time interval selected should approximate the time taken to increase the room temperature by 1 degree.
10	Set if you chose tPi regulation. Select a lower number for heating systems with a slow response, and a higher number for heating systems with a fast response
11	Set if you chose tPi regulation. Sets the temperature below the set-point at which tPi contol will begin.

Care and Cleaning

Cleaning the touchscreen transmitter

- **Turn it off first:** Before wiping down the unit, briefly touch the ON/OFF button on the screen to turn the transmitter display off. This prevents you from accidentally changing your heating program or temperature targets while wiping it.
- **Use a dry, lint-free cloth**: A clean microfiber cloth (like the ones used for eyeglasses or smartphone screens) is ideal. Wipe the screen gently in a circular motion to remove dust and smudges.
- **Avoid harsh chemicals**: Never spray glass cleaner, multi-surface sprays, polish, or antibacterial wipes directly onto the thermostat. Solvents can strip the anti-smudge coating off the touch buttons and leak into the casing, shorting out the circuit board.
- **Dealing with stubborn grime**: If the screen has sticky residue on it, slightly dampen your microfiber cloth with water or a dedicated electronic screen cleaner. Ensure the cloth is merely damp, not wet, so no moisture seeps into the edges of the unit.fore wiping down the unit, briefly touch the ON/OFF button to turn the transmitter display off. This prevents you from accidentally changing your heating program or temperature targets whilst wiping it.

Battery Care and Replacement

- **Use high-quality batteries**: Always use premium AAA Alkaline batteries. Avoid cheap zinc-carbon batteries or rechargeable batteries, as they drop voltage too quickly and can cause the RF (Radio Frequency) link to drop out intermittently.
- **Annual replacement**: It is best practice to replace the batteries once a year—ideally in autumn, right before the winter heating season begins.
- **Prevent corrosion**: If you plan to turn off your heating system entirely over the summer months, consider removing the batteries. Leftover batteries can leak acid over time, ruining the internal gold contact plates.
- **Reprogramming note**: When you replace the batteries, the device retains its factory RF pairing code, but you will need to reset the current time and weekday by holding down the SET button for 5 seconds

Maintaining the RF (Radio Frequency) Link

The transmitter communicates with the receiver box (installed near your boiler) via an 868MHz wireless frequency. To care for this connection:

- **Keep airflow clear**: Do not place the desktop/wall-mounted transmitter inside enclosed shelving, directly behind heavy curtains, or too close to large metal objects (like fridges or large radiators), as these can shield the wireless signal.
- **Avoid heat/cold distortions**: Ensure the unit is kept away from direct sunlight, draughts, or lamps. If the physical casing gets falsely heated or cooled, the internal TPI algorithm will miscalculate the required heating cycles.

Cleaning the Boiler Receiver

The receiver box is hardwired to 230V mains electricity and sits next to or near your boiler.

- **Safety first**: Never use a damp cloth on the receiver box while the power is live.
- **Cleaning method**: Simply use a completely dry cloth or a static duster to remove surface dust from the outside of the casing.
- **Keep the vents clear**: Ensure the small ventilation gaps around the receiver housing remain free of household dust or pet hair to prevent the internal switching relay from overheating.

Troubleshooting

Use this section to help you try and solve any problems you may have:

Problem/Symptom	Likely Cause	Quick Checks	Possible Fix
Blank or dim thermostat display	Dead or weak batteries	Check display brightness and battery warning	Replace with fresh AAA batteries
Lo Bat message	Low batteries	Look for low battery warning on display	Replace batteries and reset time/day
Boiler not responding	RF communication issue, or receiver fault	Turn thermostat above room temp and watch receiver LEDs	Re-pair thermostat and receiver
Receiver has no lights	No power to receiver	Check fused spur and power supply near boiler	Restore power or replace fuse
Receiver flashes rapidly	Lost RF pairing	Observe receiver LED behaviour	Run RF pairing procedure
Heating stuck ON	Relay stuck or override enabled	Turn thermostat OFF completely	Power cycle receiver and re-pair
Heating never starts	Thermostat not calling for heat	Increase target temp above room temp	Check mode settings and RF link
Thermostat buttons unresponsive	Software freeze or battery issue	Try removing batteries briefly	Full reset and battery replacement
Incorrect room temperature reading	Sensor issue or poor thermostat location	Compare reading with another thermometer	Relocate thermostat away from drafts/radiators
Boiler works with manual override only	Thermostat/RF issue	Press receiver override button	Re-pair thermostat or replace thermostat
Manual override also fails	Receiver, wiring, or boiler fault	Test receiver output and boiler status	Check wiring, boiler lockout, or receiver
Problems after battery change	RF link lost	Receiver flashing after battery replacement	Repeat pairing procedure
Thermostat in holiday/off mode	Incorrect operating mode	Check icons/mode settings on display	Return to normal heating mode
Intermittent heating	Weak RF signal	Heating cuts in/out unpredictably	Move thermostat closer to receiver
Complete system freeze	Software or power glitch	No response from thermostat or receiver	Remove batteries and power down system for 10-15 minutes

Re-pairing procedure:

- Ensure power is switched off on the receiver before carrying out the pairing procedure
- Perform a long press on the code pairing button located on the receiver, until you observe LED 1 rapidly flickering
- Power off the transmitter, then long press MENU button until the display illuminates. Press the MENU button until the 4 digit code is displayed (option 12)
- Press either the UP or DOWN buttons, or wait momentarily, until LED 1 ceases flickering. This signifies that the code pairing process has been successfully completed.

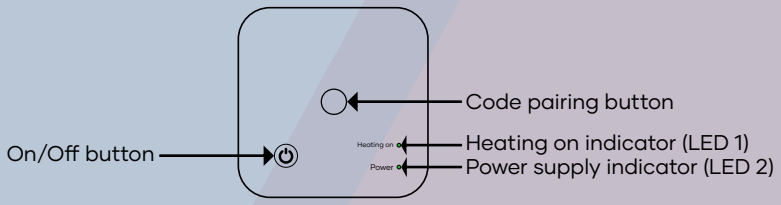

Declaration of Conformity

TOWER®
Heating and Electrical Control Solutions

TFC Group
Tower House
Vale Rise
Tonbridge
Kent, TN9 1TB
Tel: 01732 351680
sales@tfc.uk.com
www.tfc-group.co.uk

Declaration of Conformity

1. Product Identification:
Product Name: RF Programmable thermostat and receiver (PSTAT+ & PWFSTAT+)
Model: PSTAT+ (RF Programmable thermostat and receiver)
PWFSTAT+ (WiFi RF Programmable thermostat and receiver)

2. Name and Address of the Manufacturer:
Company Name: TFC Group
Address: Tower House, Vale Rise, Tonbridge, Kent, TN9 1TB

3. Object of the Declaration:
Radio frequency operating room thermostat (transmitter and receiver set)

4. Relevant UK Legislation and EU Directives:
The object of the declaration described above is in conformity with the relevant UK Statutory Instruments (and their amendments) and European Union harmonization legislation:
The Electromagnetic Compatibility Directive: **EMC 2014/30/EU**
The Low Voltage Directive: **LVD 2014/35/EU**
The Radio Equipment Directive: **RED 2014/53/EU**
The Restriction of Hazardous Substances (RoHS2) Directive: **RoHS 2011/65/EU**

5. References to Relevant Harmonized Standards:
Conformity is declared in relation to the following designated/harmonized standards and technical specifications:
EMC 2014/30/EU: EN 301 489-1 V2.2.3; EN 301 489-3 V2.1.1
LVD 2014/35/EU: EN 60730-1:2011 in conjunction with EN 60730-2-9:2010
RED 2014/53/EU: EN 301 489-1 V2.1.1:2017; EN 301 489-3 B2.1.1:2019; EN 300 220-1 V3.1.1:2017; EN300 220-2 V3.2.1:2018; EN62479:2010; EN62368-1:2014
RoHS 2011/65/EU: IEC62321-3-1:2013; IEC62321-4:2013+A1:2017; IEC62321-5:2013; IEC62321-6:2015; IEC62321-7-1:2015; IEC62321-7-2:2017; IEC62321-8:2017

7. Signed for and on behalf of:
Date of Issue: 21/05/2026
Name: Bryan Gates – General Manager

Signature: 

bsi. ISO 9001:2015 Quality Management
Cert No: RS 30178

Declaration of Conformity

TOWER
Heating and Electrical Control Solutions

TFC Group Tower House
Vale Rise Tonbridge
Kent, TN9 1TB Tel: 01732 351680
sales@tfc.uk.com
www.tfc-group.co.uk

Statement of Compliance

UK Product Security and Telecommunications Infrastructure (PSTI) Act 2022

1. Product Identification:
Product Name: WiFi RF Programmable thermostat and receiver (PWFSTAT+)
Model: PWFSTAT+ (WiFi RF Programmable thermostat and receiver)

2. Name and Address of the Manufacturer:
Company Name: TFC Group
Address: Tower House, Vale Rise, Tonbridge, Kent, TN9 1TB

3. Statement:
We hereby declare that the above product(s) comply with the applicable requirements of the UK Product Security and Telecommunications Infrastructure (PTSI) Act 2022 and related regulations for connectable consumer products.

4. Security Measures
No universal default passwords – The product does no use universal default passwords. The device connects to the user's own WiFi network using user-defined credentials during setup and commissioning.
Vulnerability disclosure policy – Security vulnerabilities may be reported through the following contact: sales@tfc.uk.com
Security update support period – Security updates for the WiFi communication module and related cloud connectivity functions will be supported for a minimum of period of 2 years from the date of manufacture. Security related maintenance for the IoT connectivity platform is supported through the Tuya IoT platform infrastructure

5. Additional Information
This product utilizes Tuya WiFi module and cloud platform services for IoT connectivity and security management functions.

7. Declaration
We declare under our sole responsibility that the products described above comply with the applicable cybersecurity requirements for UK PSTI regulations.

Date of Issue: 26/06/2026
Name: Bryan Gates – General Manager

Signature: 

bsi. ISO 9001:2015 Quality Management
Cert No: RS 30178

Environmental Information



Guarantee

12 month manufacturers warranty.

This product is guaranteed against faulty materials & workmanship for 1 year from date of purchase. For the guarantee to be valid, the unit must be installed for a competent person, in accordance with the instruction booklet.

Please retain proof of purchase.

Customer Support

www.tfc-group.co.uk

TFC Group,
Tower House, Vale Rise, Tonbridge, Kent, TN9 1TB
T 01732 351680
sales@tfc.uk.com

Made in China

Imported by TFC Group (company number 02662075)